Sebastian Toilet Roll Holder Black

SKU#: A-0052

$55.00

Length: 159.5mm
Width: 80mm
Height: 45mm
Construction: Brass
Finish: Matte Black
Design: Square, part of a complete range
Warranty:7 Year Product Warranty

The Sebastian range of bathroom accessories is modern and very appealing. Unit is constructed and will require wall mounting, screws and brackets included.

View our complete range of bathroom accessories for a matching look in your home.

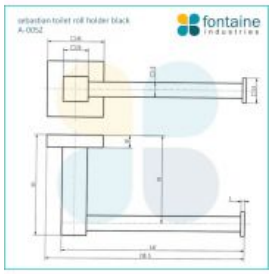

IMPORTANT: Detail shown are as listed on the date of print & may change without notice. Detail may contain technical inaccuracies or typographical errors.

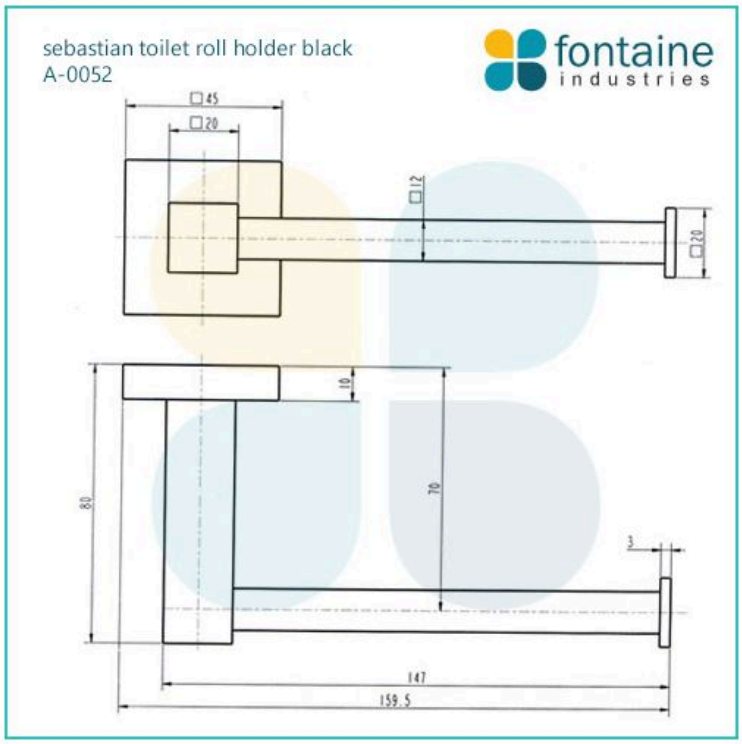

IMPORTANT: Detail shown are as listed on the date of print & may change without notice. Detail may contain technical inaccuracies or typographical errors.