Sebastian Handheld Shower Head with Rail Internal Inlet Black

SKU#: S-2048

From $259.00

HANDHELD SHOWER 3 FUNCTION UPGRADE

Total Height (Excluding Hose): 678mm
Handheld Size: 35mm x 220mm
Hose Length/Reach: 1500mm
Construction: Brass (With ABS Handheld)
Finish: Matte Black
Water Inlet: Internal (Bottom)
Accreditation: AU Standard, WELS 8L/min 3 Star and Watermark
WELS Registration: S02504
Warranty: 7 Year Product Warranty

This matte black rail with handheld shower head provides an excellent and easy way to clean. With added convenience, the handheld showerhead holder slides up and down to your preferred position. The thin square shower head is an ergonomic design that is easy to hold and use. The Sebastian range showcases a beautiful square design that is contemporary yet timeless. With a sophisticated matte black finish, this shower rail and head set will give your bathroom the luxurious hotel feeling you've been looking for.

Match with the wall mixer of your choice, see our store for options.

See listing image for measurement specification.

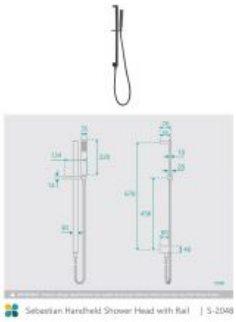

IMPORTANT: Detail shown are as listed on the date of print & may change without notice. Detail may contain technical inaccuracies or typographical errors.

IMPORTANT: Detail shown are as listed on the date of print & may change without notice. Detail may contain technical inaccuracies or typographical errors.

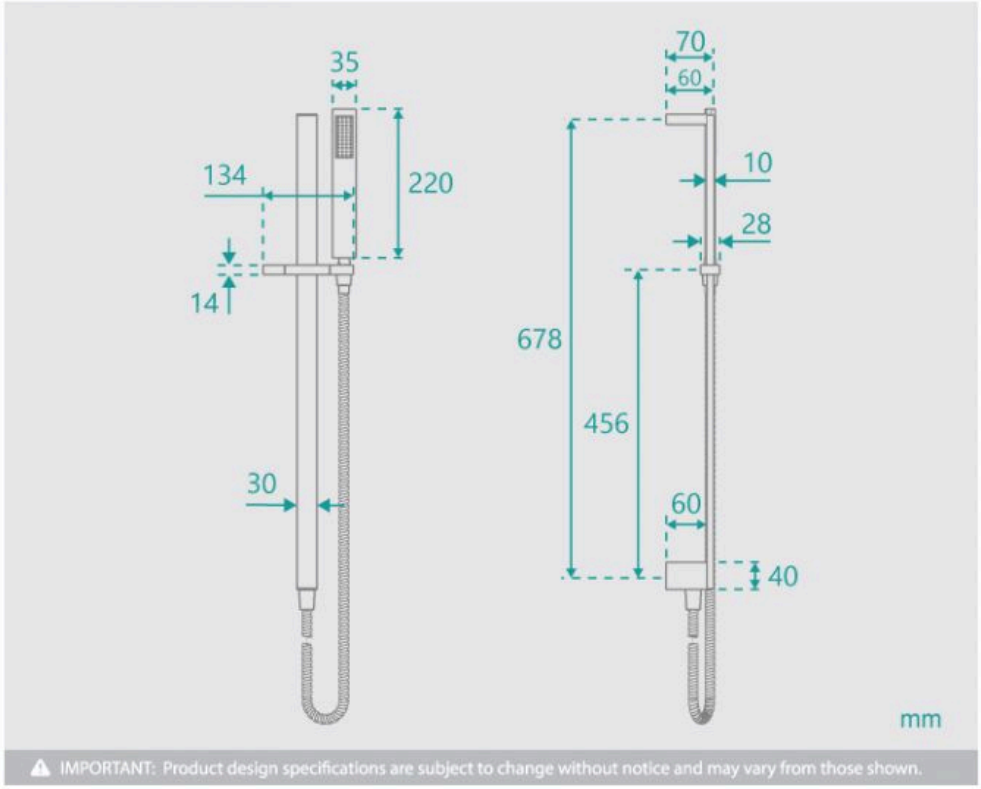

Sebastian Handheld Shower Head with Rail | S-2048